Phase 2 Report

Large Load Company (LLC)

Alex Shannon
Connor Dial
Luis Aguilar
Omar Rios
Oscar Barrera
Stanley DeCastro

MAE 342 - Principles of Mechanical Design
Max Ren

Arizona State University

Large Load Company (LLC)....1
6. Detailed CAD Design & Engineering Analysis....3
6.2.1 CAD requirements.... 3
Full 3D assembly.... 3
Drawings and views....5
Printability.... 13
6.2.2 Required engineering analyses.... 13
Static stress and factor of safety....13
Fatigue assessment....15
Gear tooth loading (if applicable)....16
Key / coupling / interface stresses (if applicable)....17
Bearing load....17
Global safety overview....17

6. Detailed CAD Design & Engineering Analysis

6.2.1 CAD requirements

Full 3D assembly

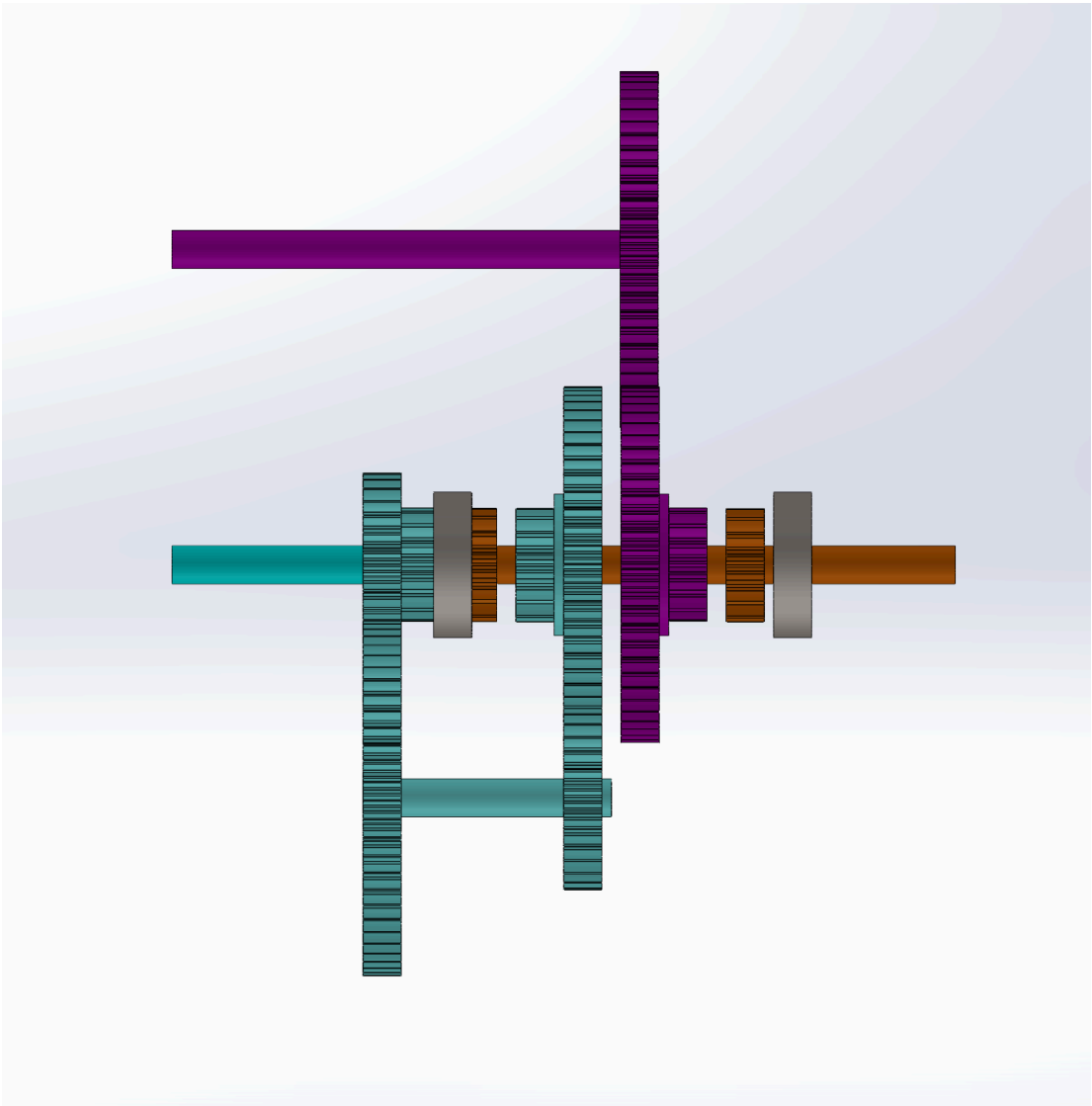

Phase 2 Report

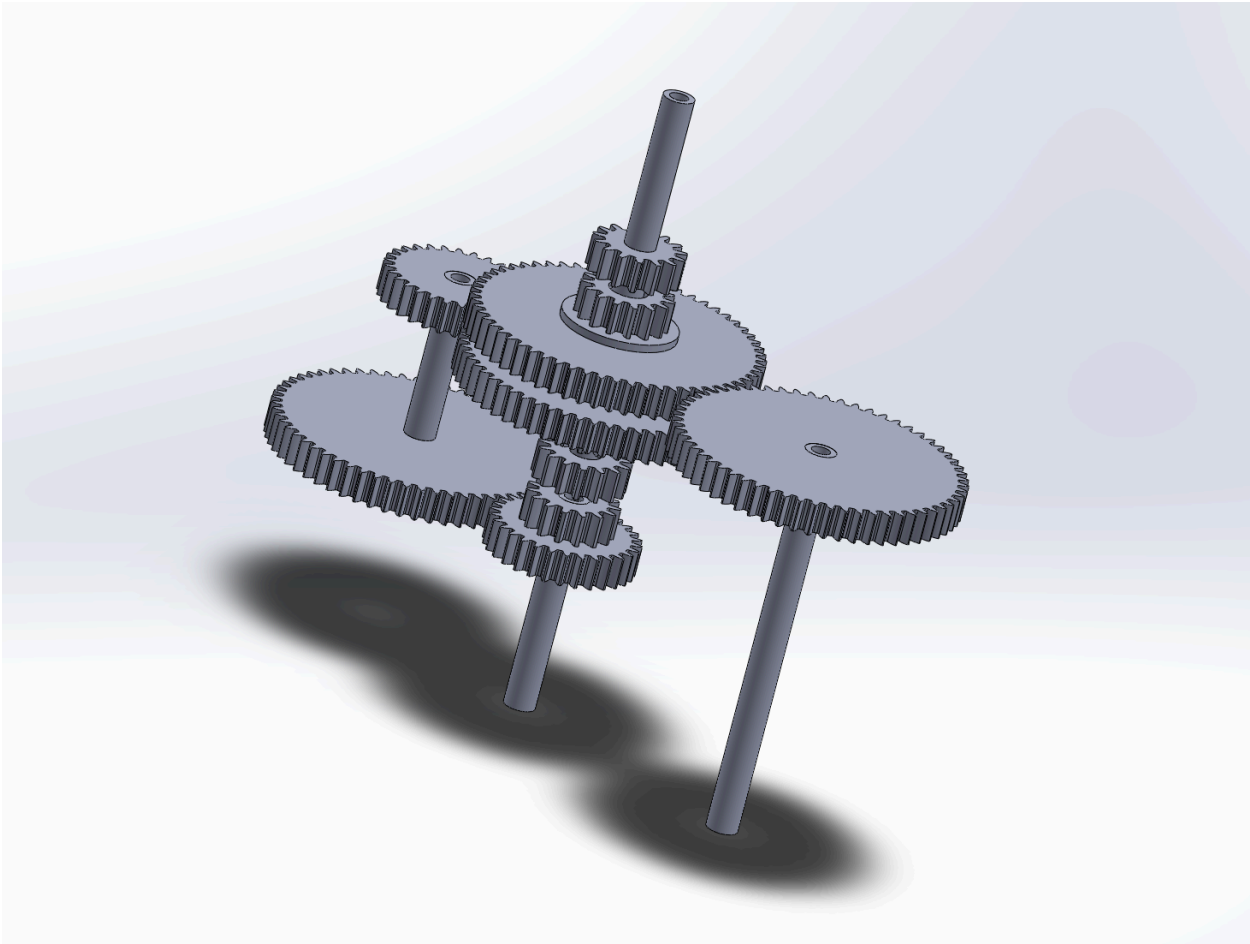

Video and Motion study located in GitHub

Phase 2 Report

Drawings and views

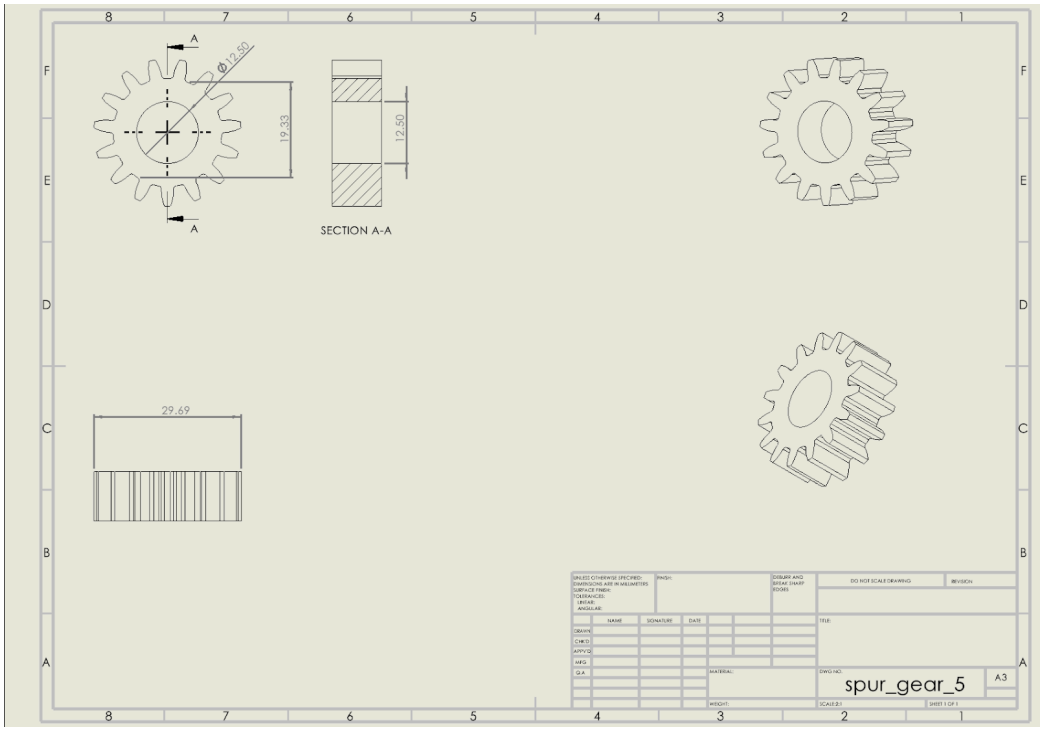

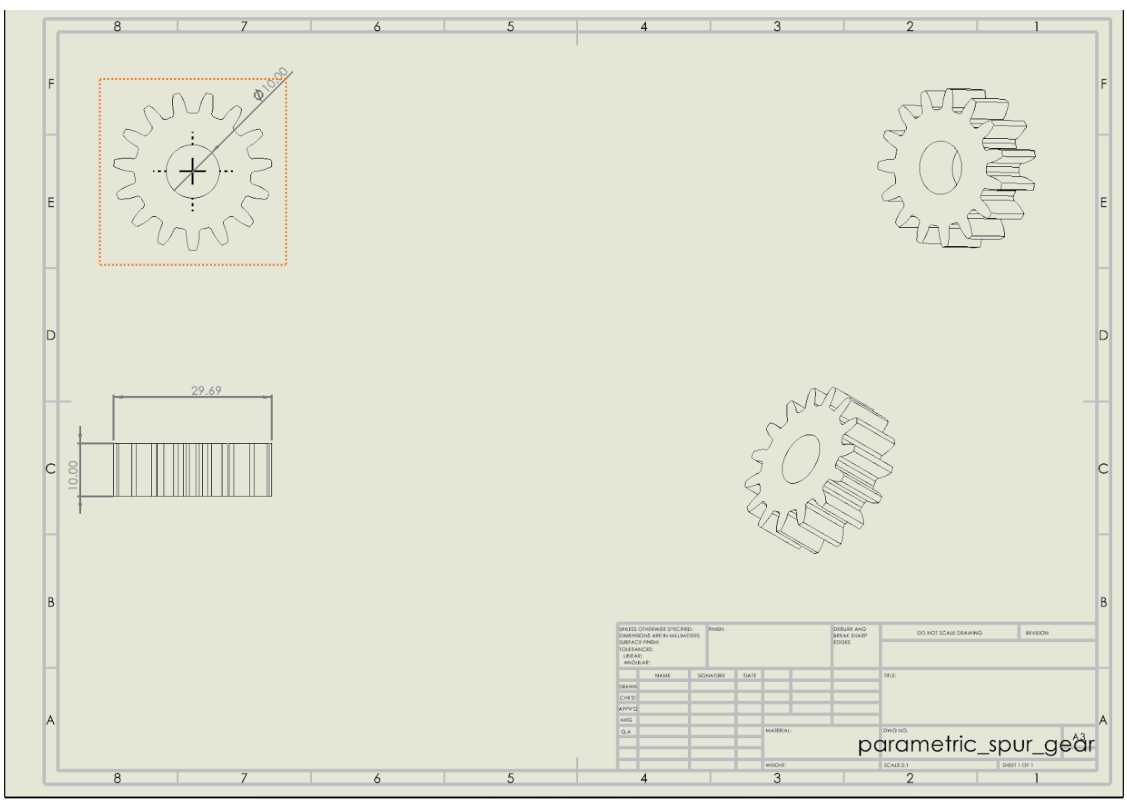

Phase 2 Report

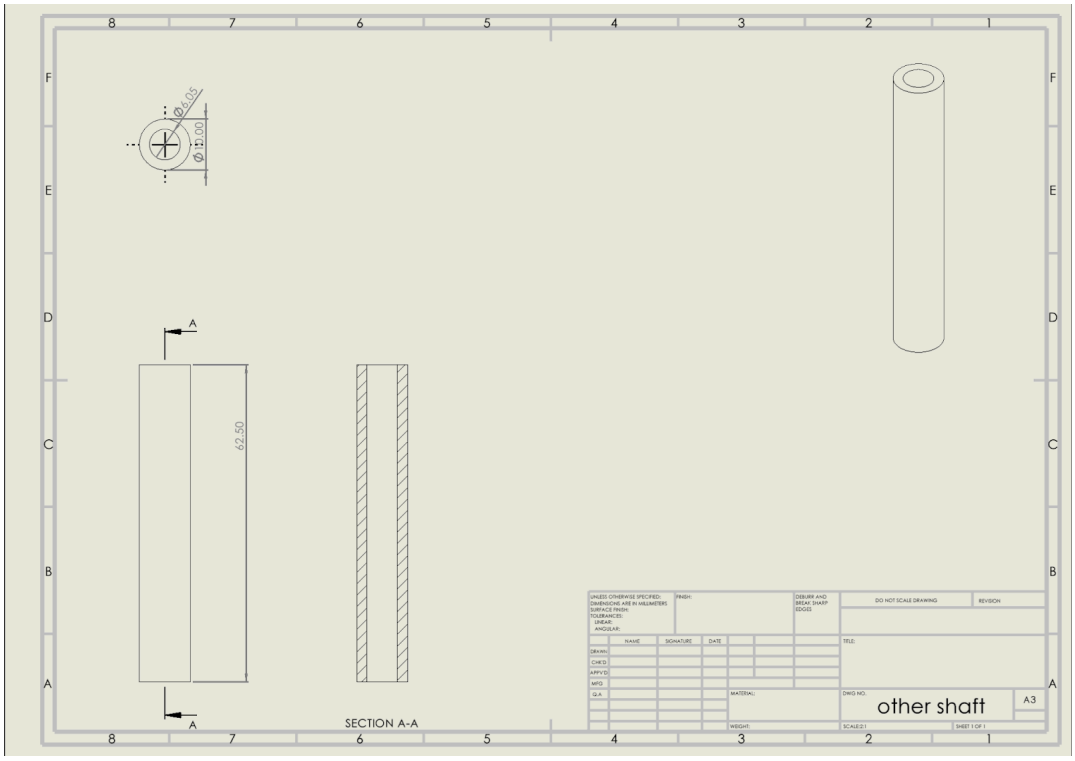

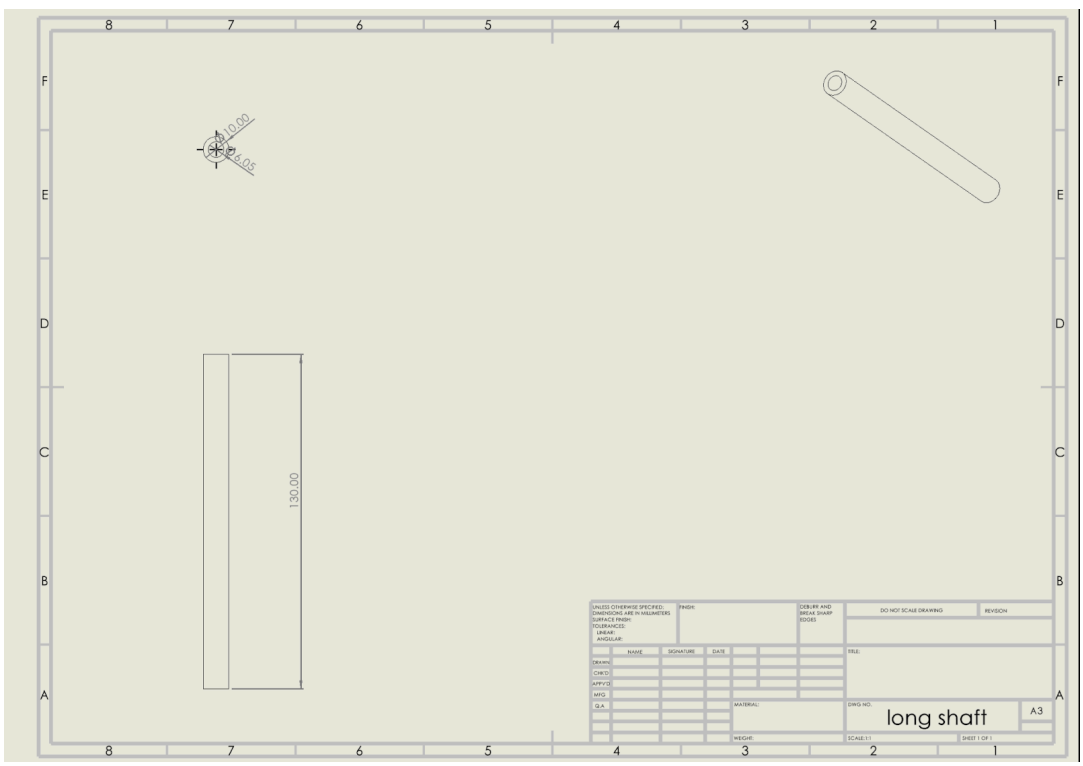

Phase 2 Report

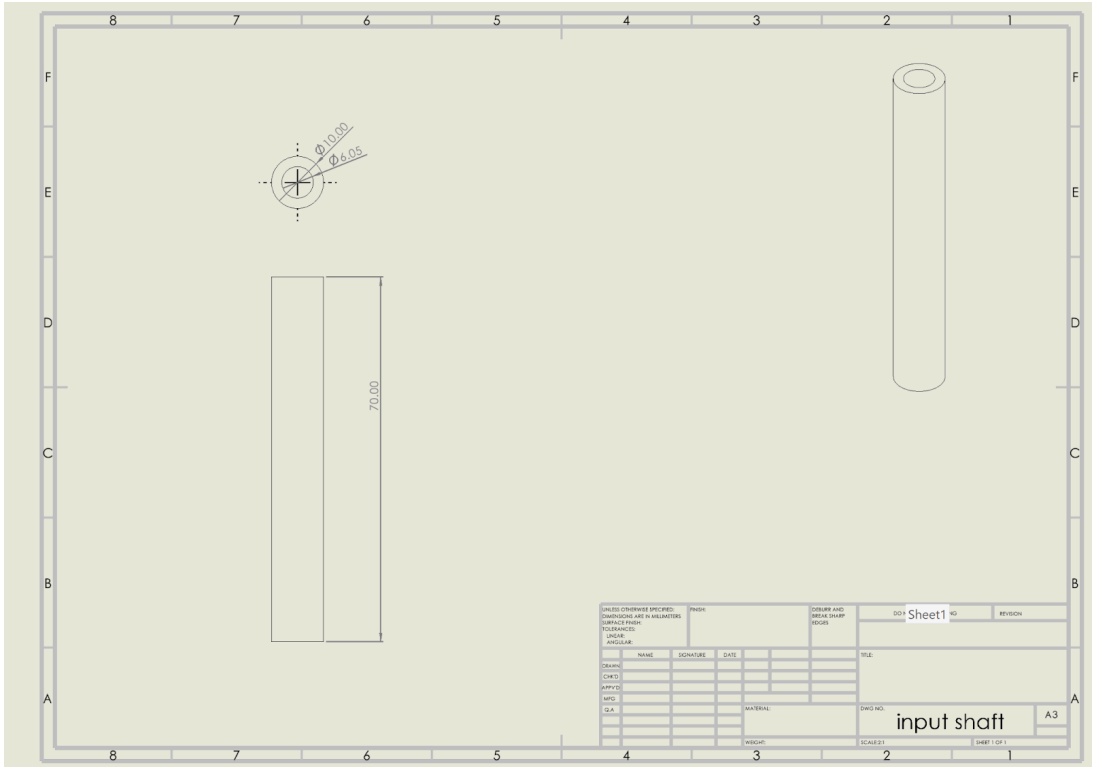

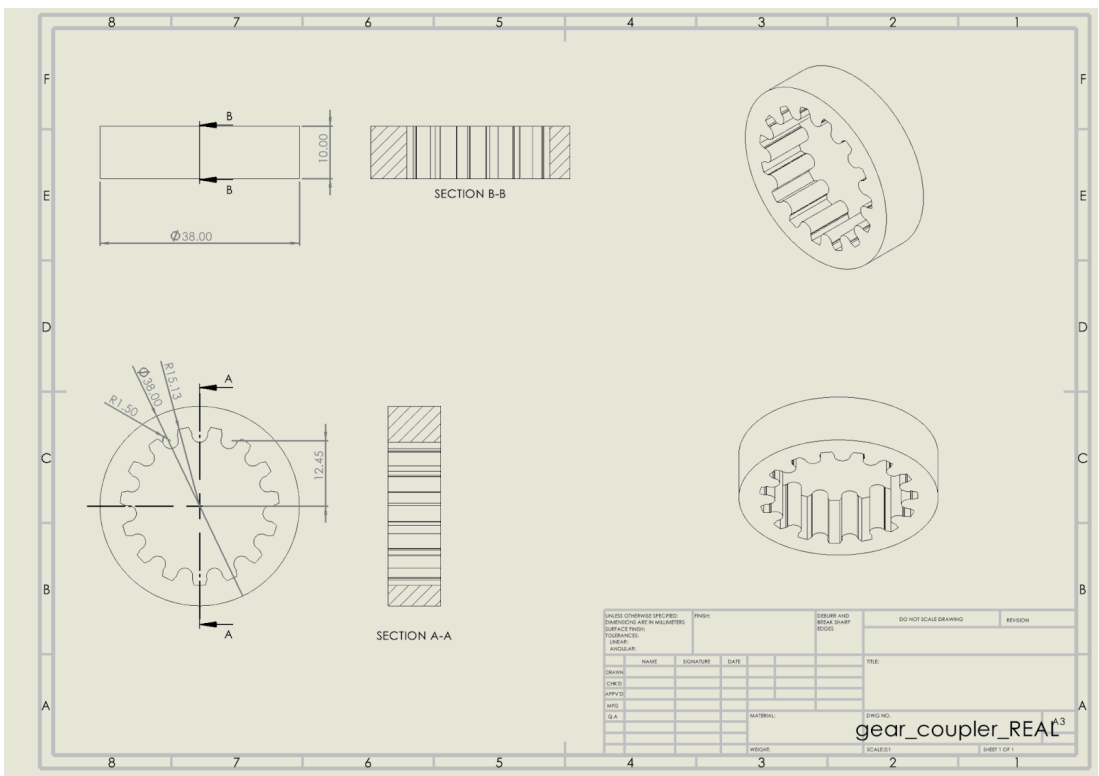

Phase 2 Report

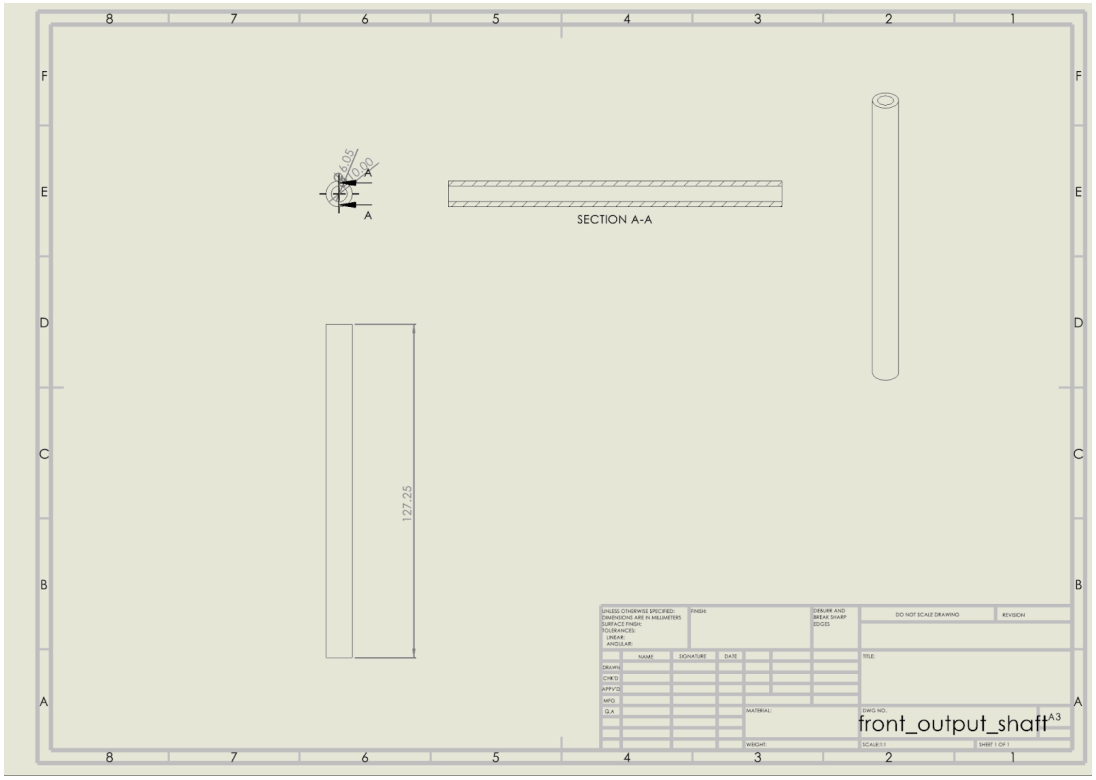

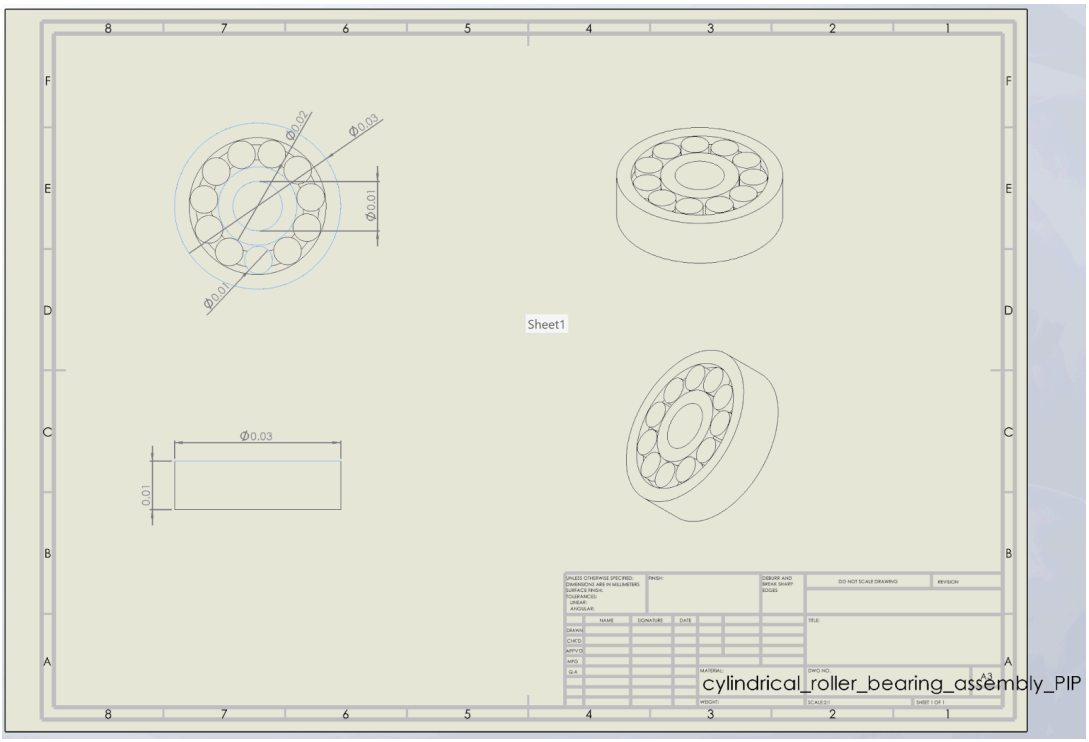

Phase 2 Report

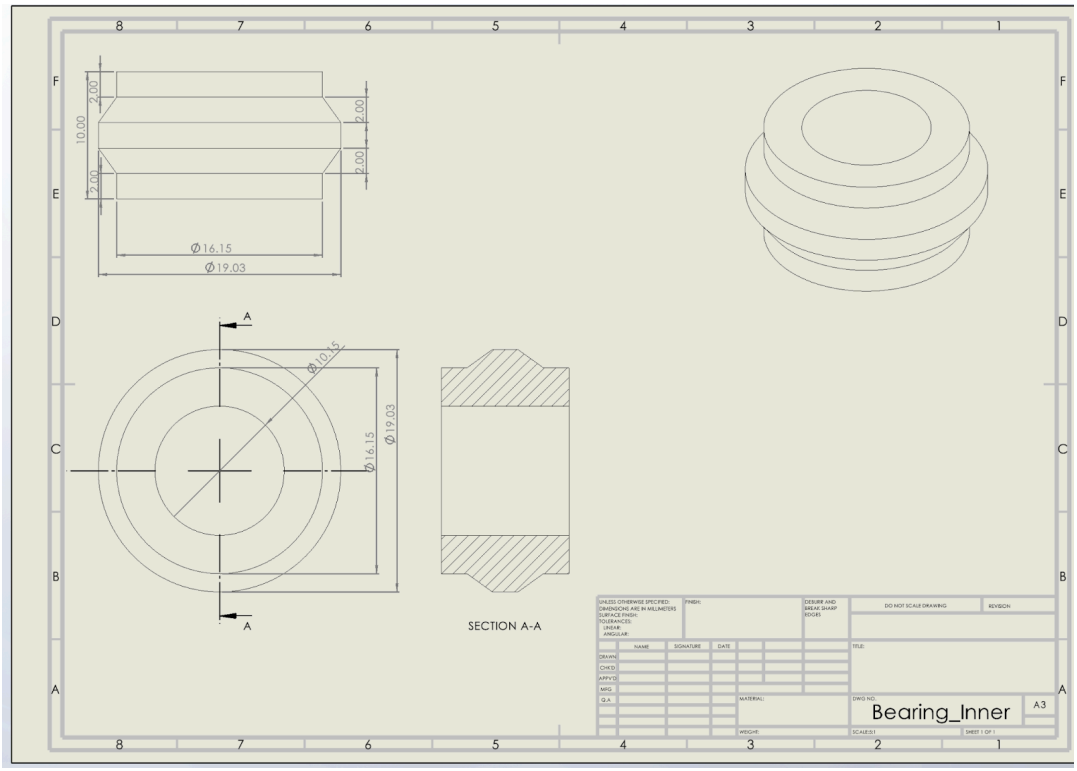

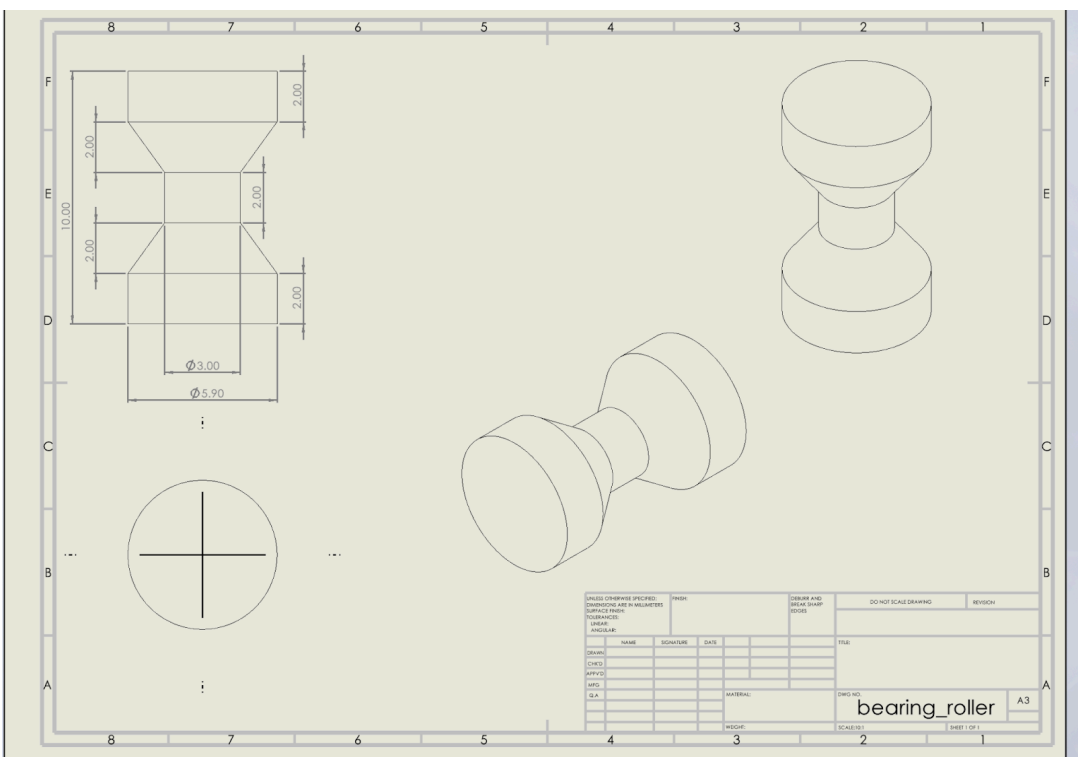

Phase 2 Report

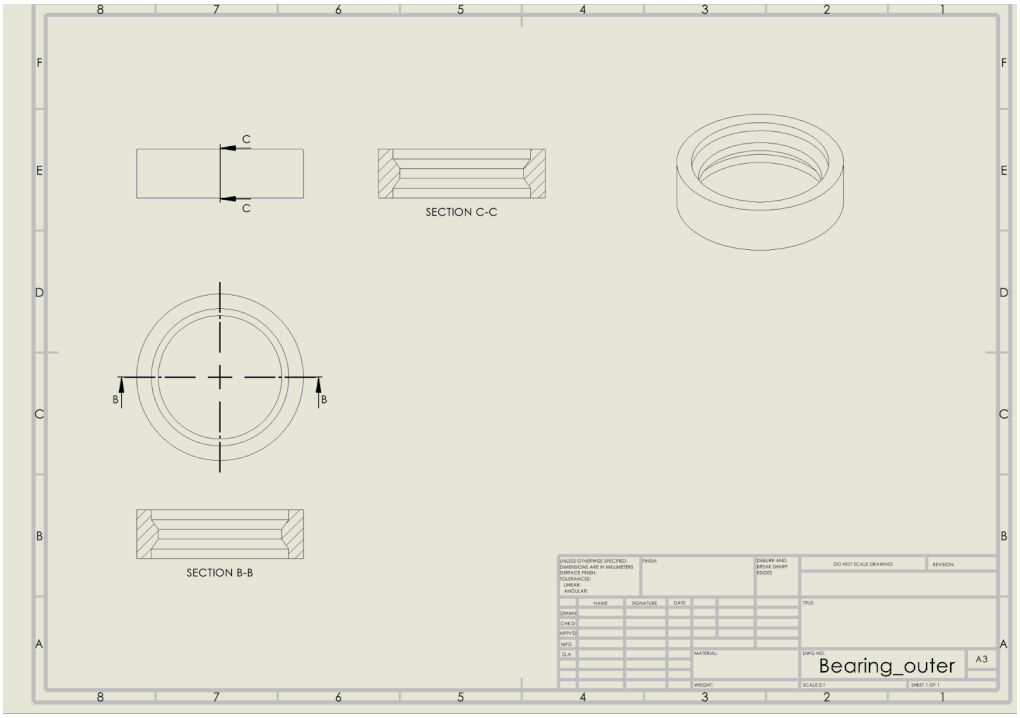

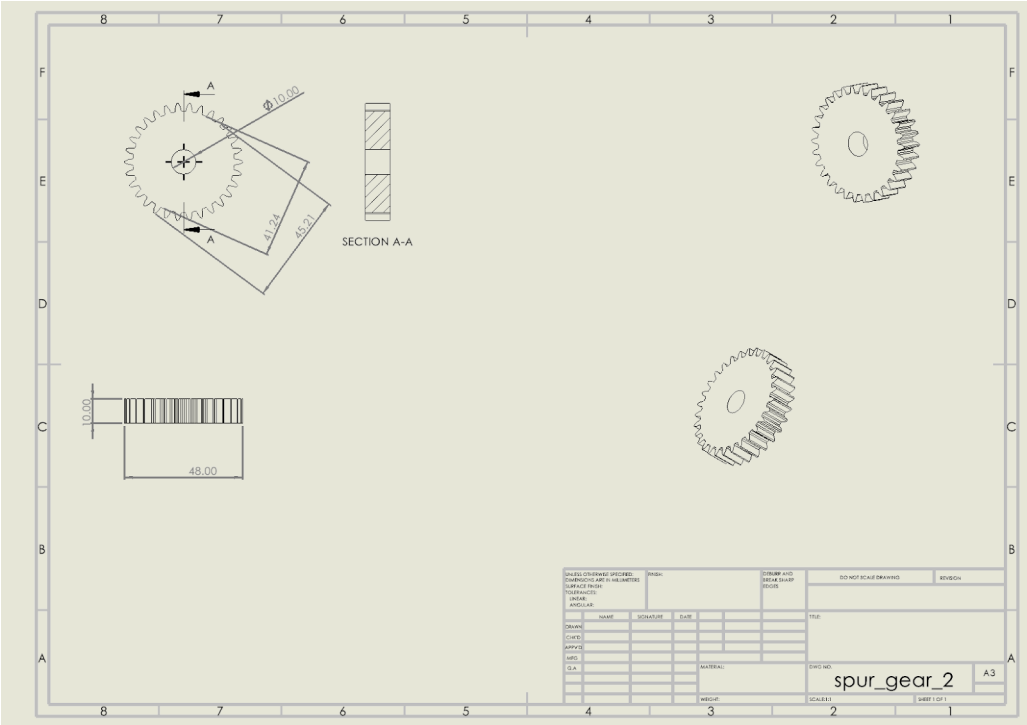

Phase 2 Report

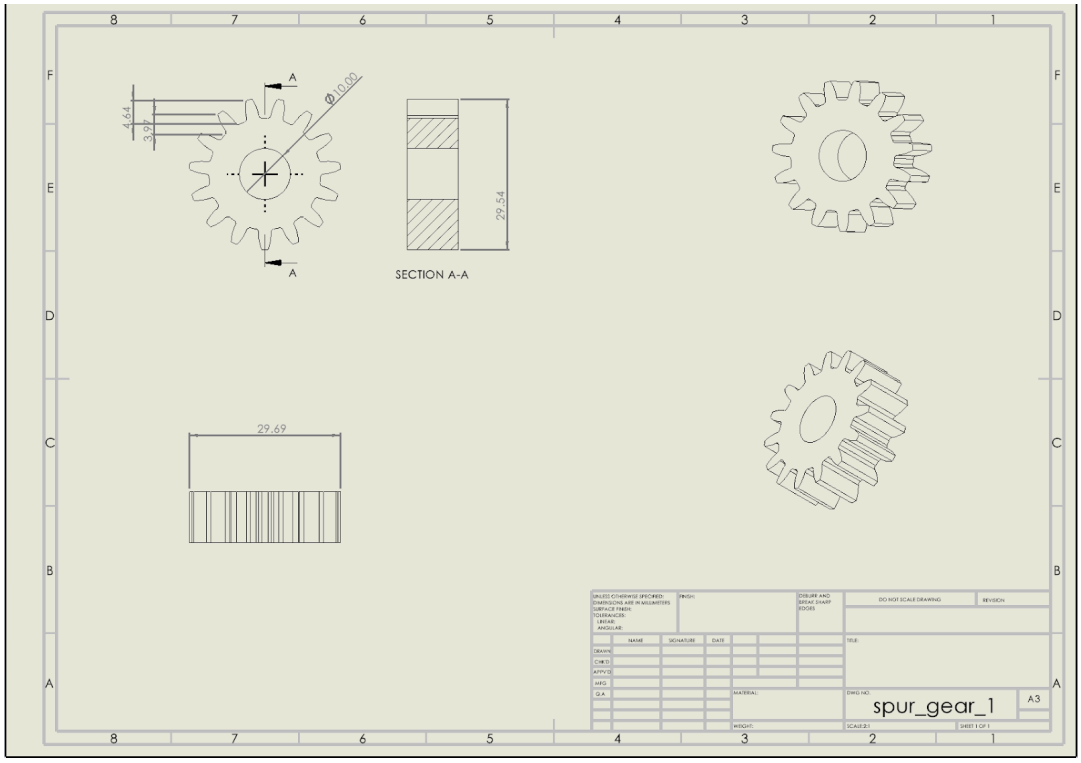

Phase 2 Report

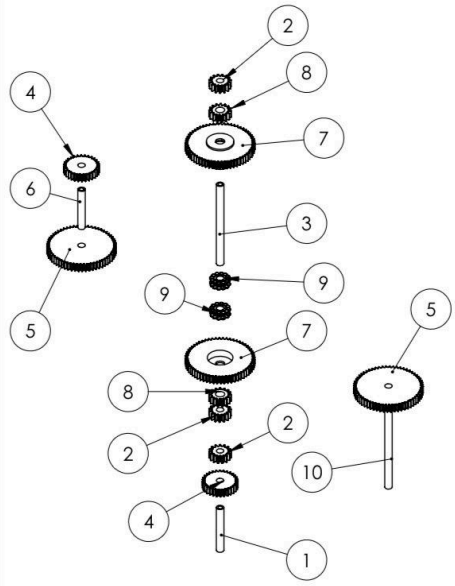

ITEM NO.	PART NUMBER	DESCRIPTION	QTY.
1	Input shaft	4130 Steel	1
2	Spur Gear 1	4140 Steel	3
3	Long Shaft	4130 Steel	1
4	Spur Gear 2	4140 Steel	2
5	Spur Gear 3	4140 Steel	2
6	Medium shaft	4130 Steel	1
7	Spur Gear 4(W/bearing)	4140 Steel	2
8	Spur Gear 5	4140 Steel	2
9	Cylindrical Roller Bearing Assembly	301 Stainless Steel	2
10	Front Output Shaft	4130 Steel	1

UNLESS OTHERWISE SPECIFIED:
DIMENSIONS ARE IN INCHES
TOLERANCES:
FRACTIONAL ±
ANGULAR: MACH ± BEND ±
TWO PLACE DECIMAL ±
THREE PLACE DECIMAL ±
INTERPRET GEOMETRIC TOLERANCING PER:
MATERIAL
FINISH
DO NOT SCALE DRAWING

	NAME	DATE
DRAWN		
CHECKED		
ENG APPR.		
MFG APPR.		
Q.A.		

COMMENTS:

TITLE:

SIZE A | DWG. NO. Assem1 | REV

SCALE: 1:12 | WEIGHT: | SHEET 1 OF 1

NEXT ASSY | USED ON

APPLICATION

PROPRIETARY AND CONFIDENTIAL
THE INFORMATION CONTAINED IN THIS DRAWING IS THE SOLE PROPERTY OF <INSERT COMPANY NAME HERE>. ANY REPRODUCTION IN PART OR AS A WHOLE WITHOUT THE WRITTEN PERMISSION OF <INSERT COMPANY NAME HERE> IS PROHIBITED.

SOLIDWORKS Educational Product. For Instructional Use Only.

Printability

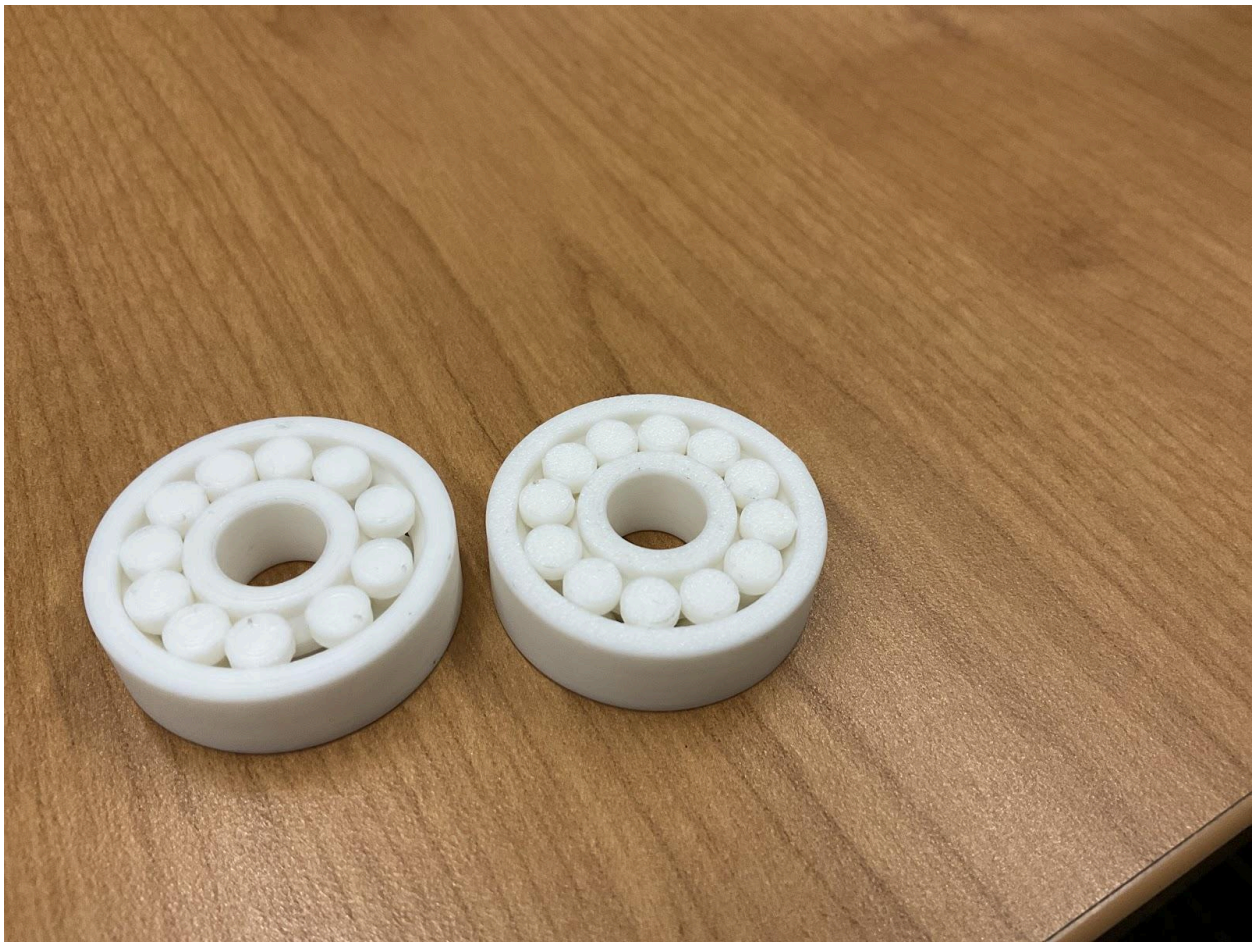

The transfer case was designed with 3D printability in mind by ensuring that all components fit within the available printer build volume and by using practical feature sizes and clearances for the selected printing process. To validate the design, prototype ball bearings were 3D printed and inspected after fabrication. The print bearings were structurally solid and retained their intended geometry, indicating that the design is feasible for physical prototyping. This print test also provided confidence that the chosen tolerances and part dimensions are suitable for assembly and functional evaluation.

6.2.2 Required engineering analyses

Static stress and factor of safety

$\tau = \frac{Tc}{J}$ $\quad J = \frac{\pi}{2}(r_o^2 - r_i^2)$

$E = 200\,GPa$
$G = 80\,GPa$
$S_y = 435\,MPa$

$\tau = \frac{(750\,Nm)(.019)}{J}$ $\quad J = \frac{\pi}{32}(d_o^4 - d_i^4)$

$d_o = .038\,m$
$d_i = .023\,m$

$J = \frac{\pi}{32}(.038^4 - .023^4)$

$J = 1.77 \times 10^{-7}\,m^4$

$\tau_{max} = 80.4\,MPa$ ~ Torsional Shear stress

$\theta = \frac{T \cdot L}{G \cdot J} \rightarrow \frac{(750\,Nm)(.33m)}{(80\,GPa)(1.77\times10^{-7}\,m^4)} = \frac{247.5\,Nm^2}{(80\times10^9\,\frac{N}{m^2})(1.77\times10^{-7}\,m^4)} = \frac{247.5\,Nm^2}{14160\,Nm^2} = .01747\,rad$

$0.01747\,rad = 1°$

$\sigma_{vm} = \sqrt{3}\,\tau_{max}$
$\sigma_{vm} = 139.3\,MPa$ ~ Static yielding Check

$S_y = 435\,MPa$
$n = \frac{S_y}{\sigma_{vm}} = \frac{435}{139.3} = 3.12$ F.S

Belt force of pulley
$T = (F_t - F_s)r$
$F_t - F_s = \frac{T}{r} \rightarrow \Delta F = \frac{750}{r}$

$M = F_{belt,\,resultant}(.09m)$

$F_{belt,\,resultant} = 0.3 F_{tight}$

$F_{belt,\,res} = 1.86\frac{T}{r}$

Fatigue assessment

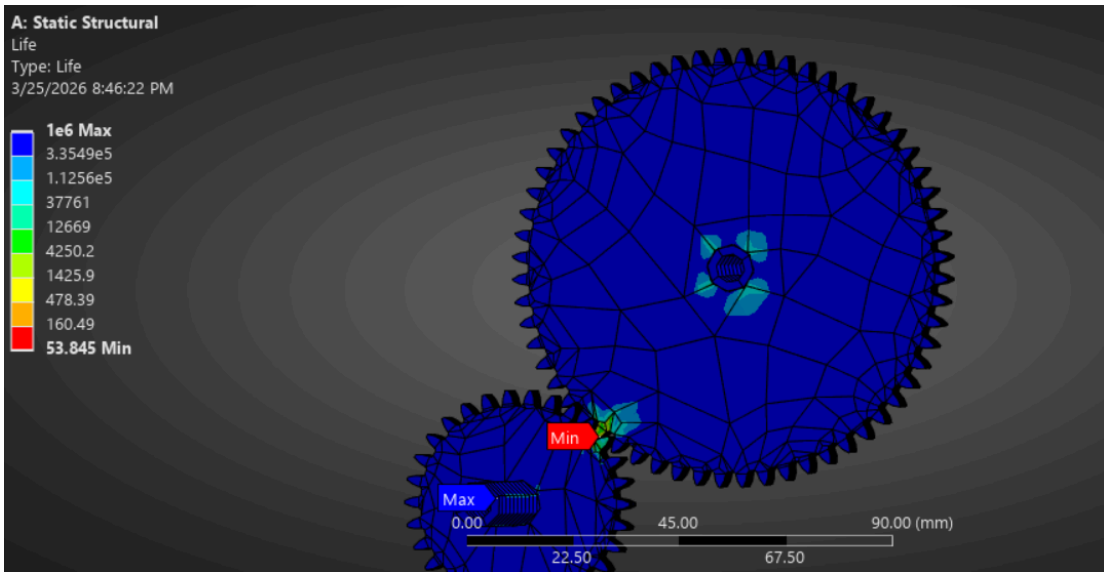

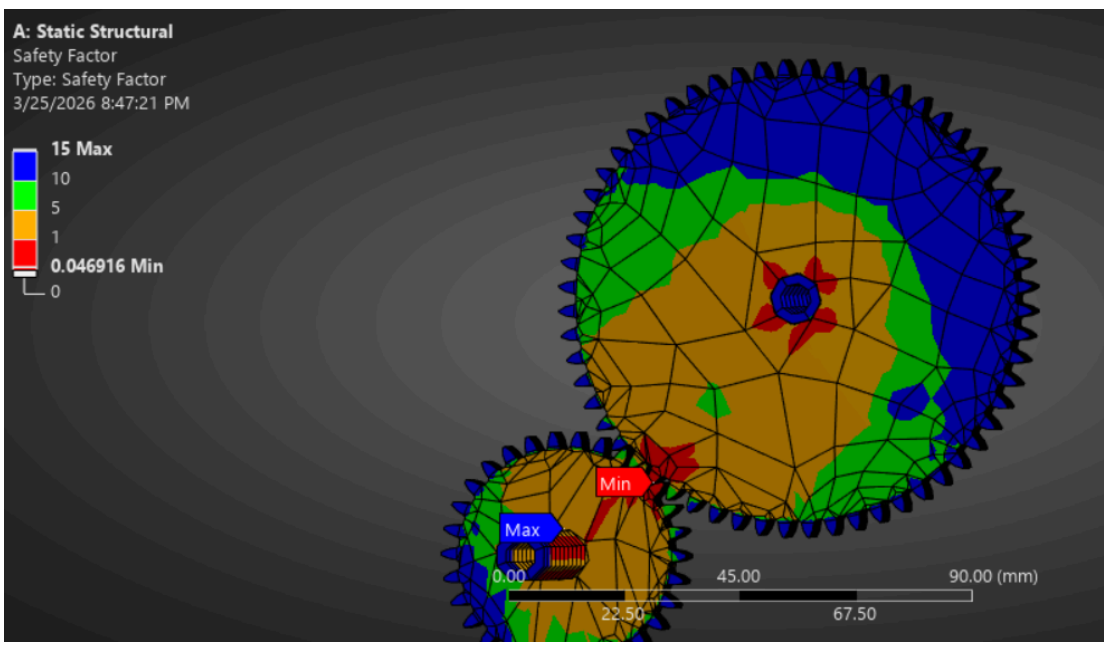

Gear tooth loading (if applicable)

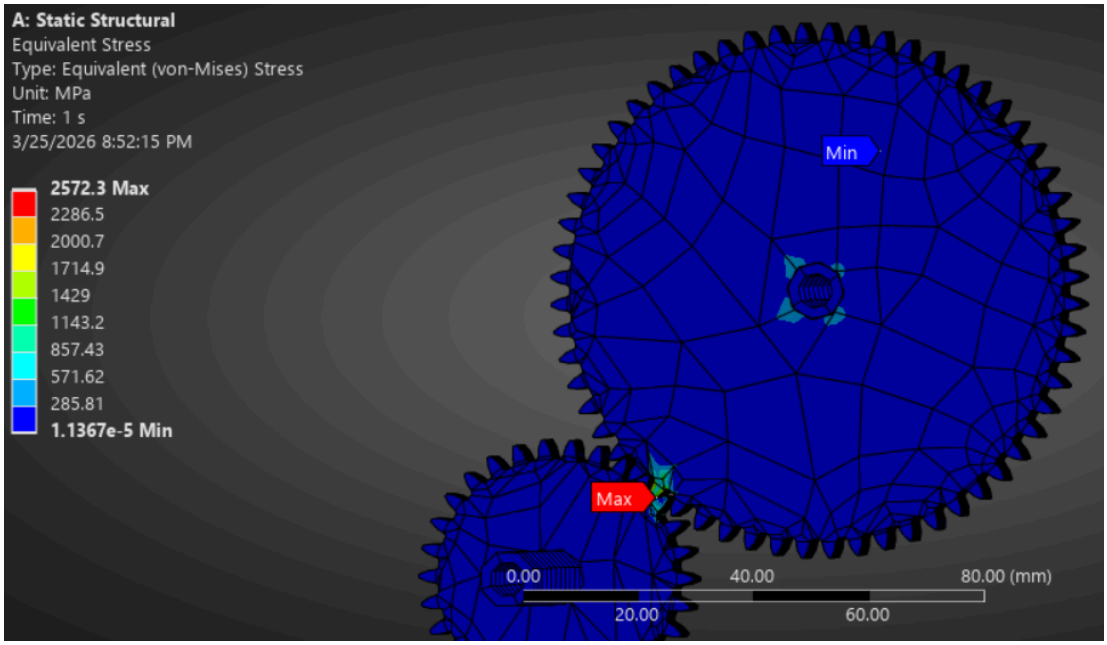

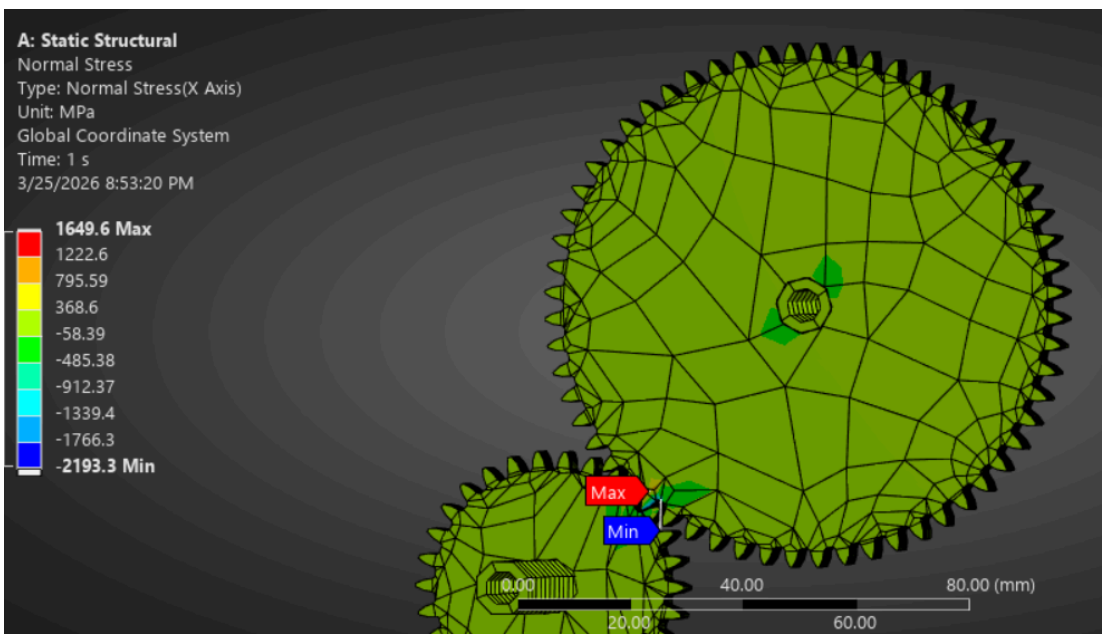

The bending and von Mises stresses show that the torque we chose to apply to the system is way too high, and we must choose a different one to apply because our system will fail. Doing a MATLAB analysis of the bending stress of the gears, gave the following results.

```
Actual Stress: 1256.22 MPa
Allowable Stress: 345.15 MPa
```

```
CH Factor: 0.9997
STATUS: FAIL (CONTACT)
```

We will need to consider changes to the system, as well as double checking our analyses to ensure that we are proceeding correctly.

Key / coupling / interface stresses (if applicable)

Stresses accounted for in static analysis work done by hand

Bearing load

Due to constantly changing shaft diameter we were not able to perform bearing stress analysis as design parameters were constantly changing however, ANSYS has a bearing simulator that makes it easier to perform analysis once a permanent shaft parameters are decided

Global safety overview

A fatigue analysis was performed on the gear part of the system, while we did expect the teeth to have the lowest lifetime, we did not expect it to be this low, we believe that this is due to the extreme torque we are applying to the system, so we will need to lower that torque applied. Once torque is reduced for a more realistic approach, we can expect a factor of safety of at least 2